ARMERA®

INSTALLATION INSTRUCTIONS

WALL HUNG TOILET

ARMERA Limited | info@armera.co.uk | www.armera.co.uk

Please Note

Please follow all instructions carefully. Failure to do so could invalidate your guarantee. As with the installation of any water bearing product, you must make sure that any laws prevalent to your area are followed. Such laws may include Local & National Water Supply Authority Regulations or Byelaws and Building and Plumbing Regulations. We recommend that a qualified registered plumber is used to install your product. Please ensure that when fitted, the product is easily accessed for service and maintenance requirements. ARMERA cannot be held liable for costs associated with accessing the product after it is fitted.

Before starting installation

Whilst these products are made to a high standard, please take every care when handling them to avoid surface damage.

Please remove all packaging and make sure no components are missing. The following components should be present:

ITEM	DESCRIPTION
1	Allen Key
2	Fixing bar (x2)
3	Fixing body (x2)
4	Fixing nut (x2)
5	Grub screws (x2)
6	Guide cone (x2)
7	Screw paddle
8	Flow regulation ring

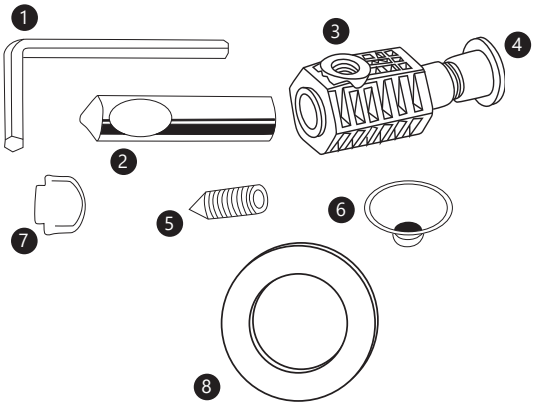

Installation

1. Follow the instructions for installation of concealed cistern frame (supplied separately). You will be left with the following parts protruding from the wall:

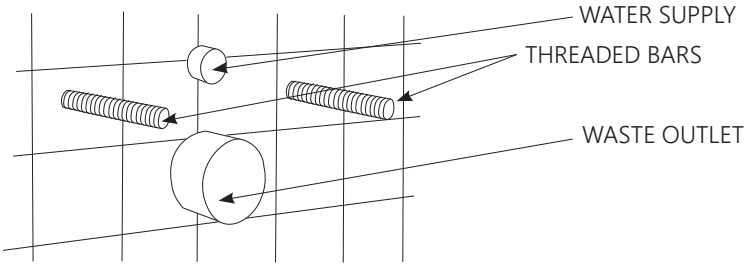

2. Mark the correct lengths for the flush pipe and pan connector (supplied with the concealed cistern).

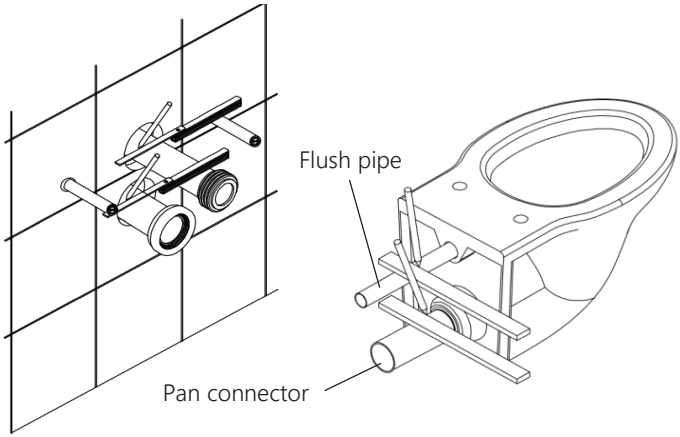

3. Cut the flush pipe and pan connector to the correct length.

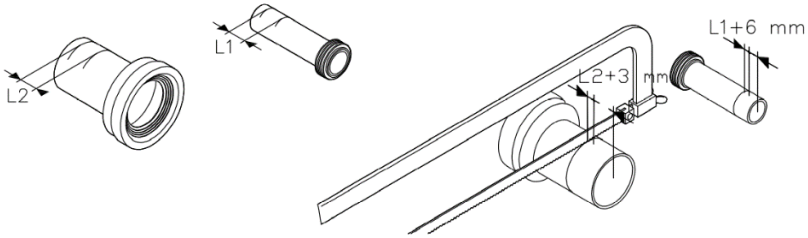

4. Make a chamfer on the outer face of the flush pipe and pan connector and apply silicon grease to the inner face of the pipes in the wall.

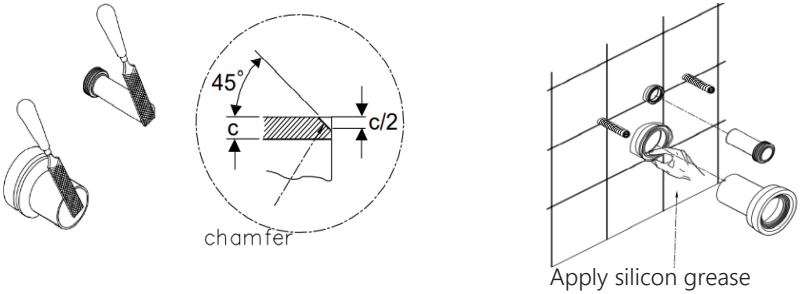

5. Ensure 55mm of threaded bar is exposed then screw the fixing bars onto the threaded bars ensuring the machined groove faces upwards. Leave 30mm of thread exposed between the back of the fixing bar and the wall.

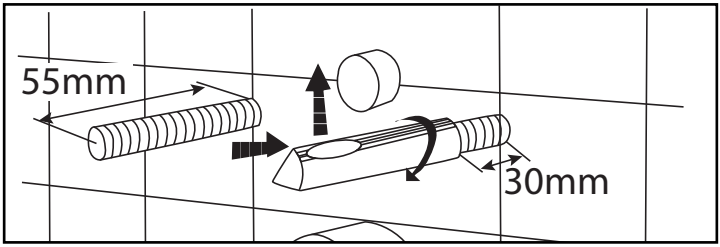

6. Remove the fixing nut from the fixing body then attach the guide cone to the fixing body and screw in the grub screw.

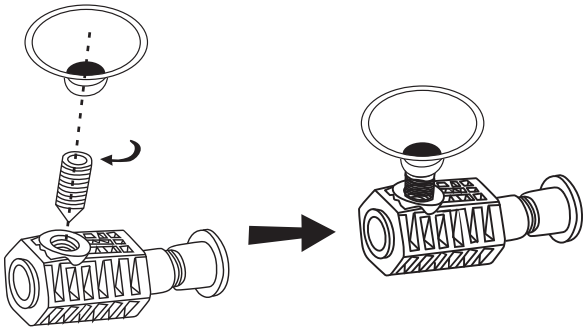

7. Insert the fixing body assembly into the inside of the toilet mounting holes. Secure them in position by attaching the fixing nuts from the back of the hole and tighten them using the screw paddle.

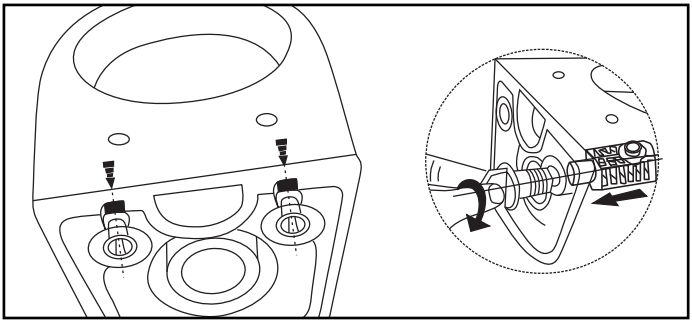

8. If the WC is being used on a cistern frame taller than 82cm, please insert the flow regulation ring into the water inlet. This will ensure that the flush is optimised to avoid water splashing out of the WC bowl.

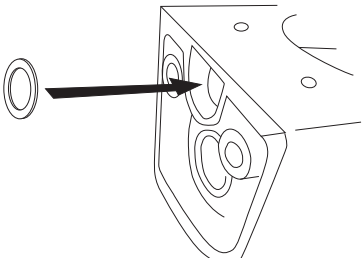

9. Offer the toilet up to the wall, sliding the fixing bars into the fixing body and connecting the flush pipe and pan connector into the corresponding pipes in the wall.

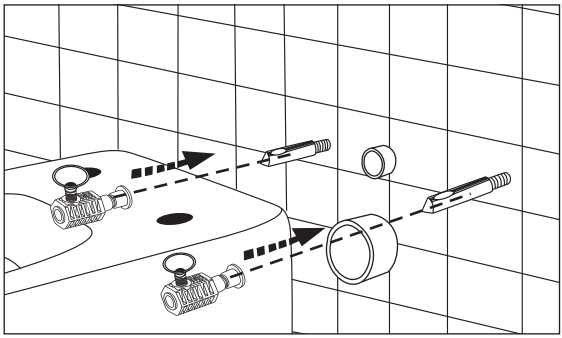

10. Insert the allen key into the seat cover hole in the toilet pan. Use it to tighten the grub screws securing the toilet pan in position.

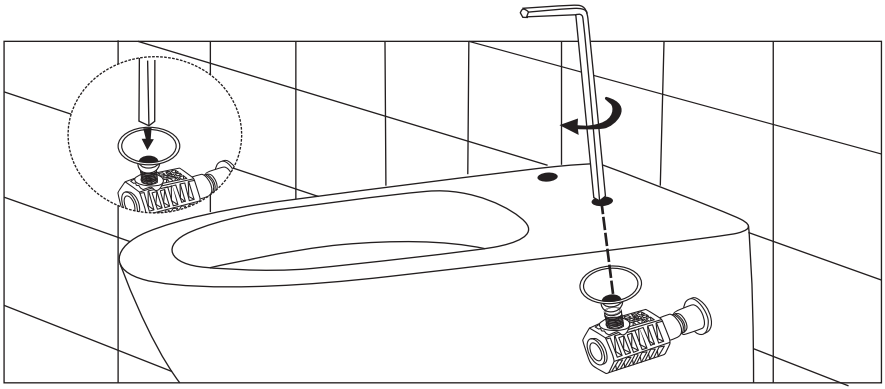

11. Attach the toilet seat by following the instructions provided with the seat.
12. Apply a bead of silicone to the joint between the WC pan and the wall.

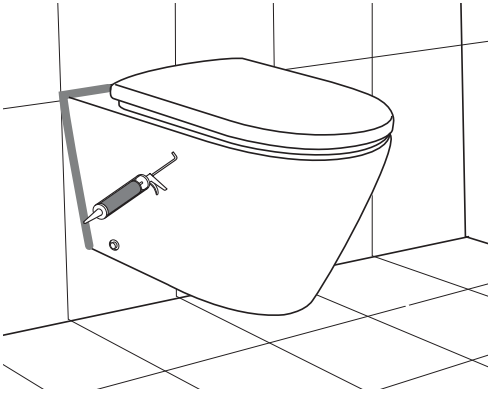

Contact us

Should you need any assistance, please email us at info@armera.co.uk or call 01225 251204

Guarantee

This ARMERA product is guaranteed against manufacturing defects. The cover period is from date of supply to the ARMERA customer and will last for 2 years for parts and labour. The parts guarantee can be extended by registering your guarantee. To register your guarantee and review all guarantee conditions, please go to www.armera.co.uk

5 YEAR GUARANTEE

Concealed cisterns, flushing mechanisms and WC seats

25 YEAR GUARANTEE

Ceramic toilets and basins